Round 1 - Thursday, July 1, 2021

SHOTLINK

Rocket Mortgage Classic

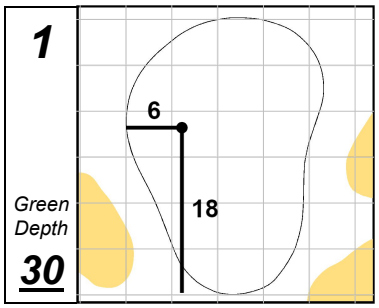

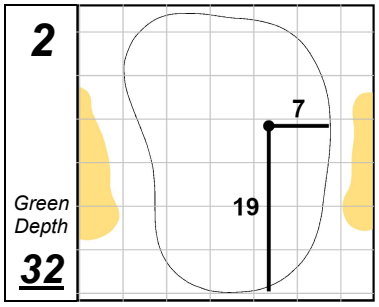

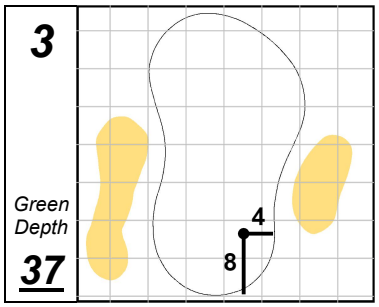

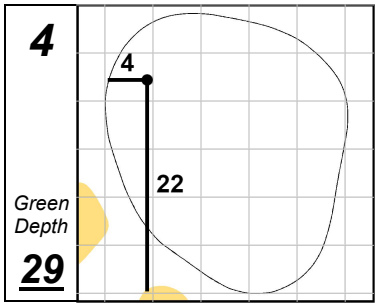

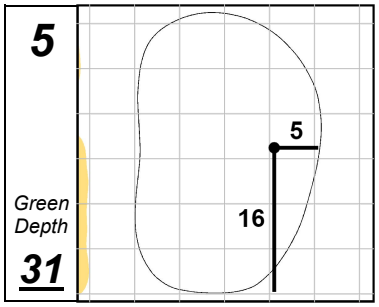

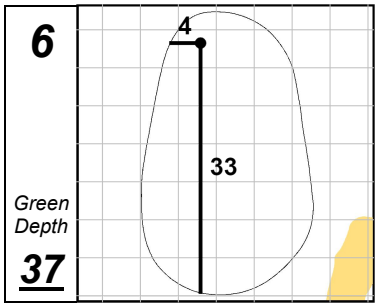

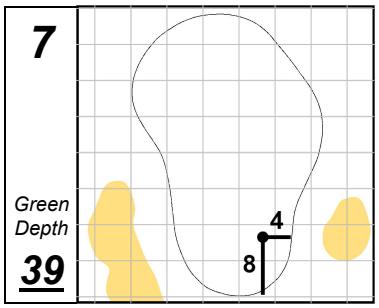

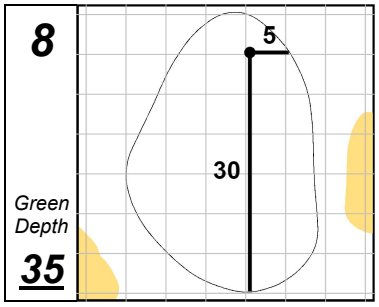

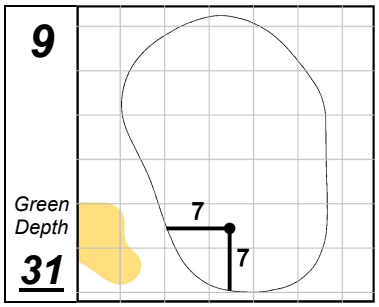

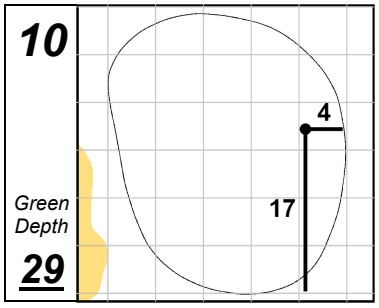

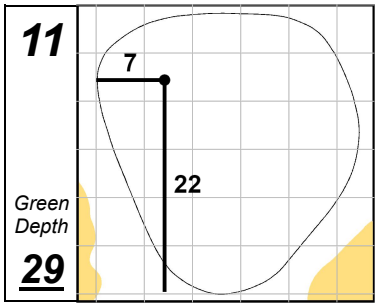

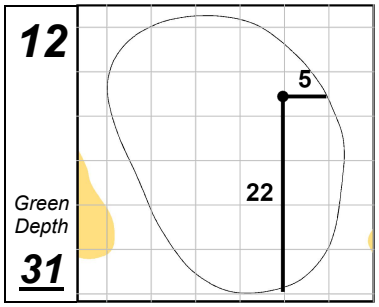

Detroit Golf Club

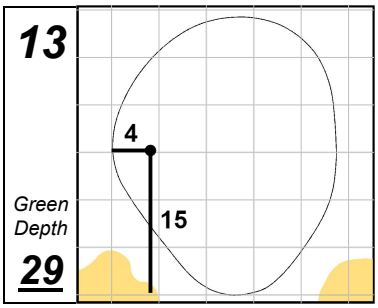

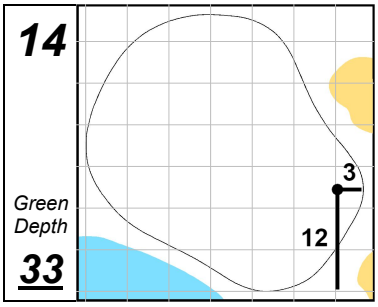

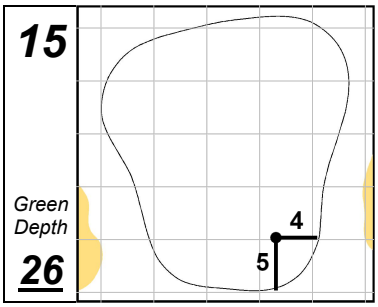

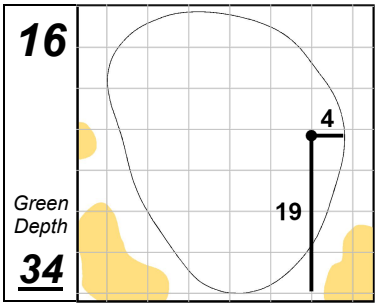

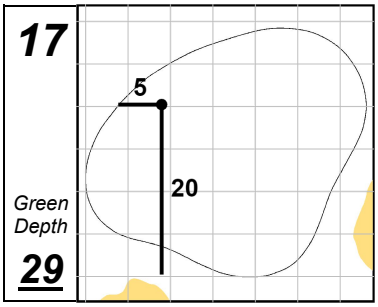

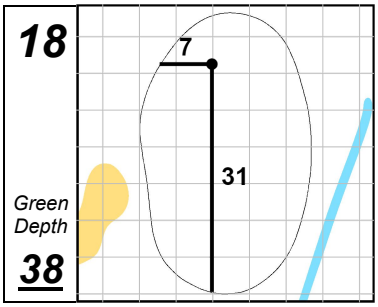

Each side of a complete square on the green represents 5 YARDS.

Wednesday, June 30, 2021 8:14:35 AM